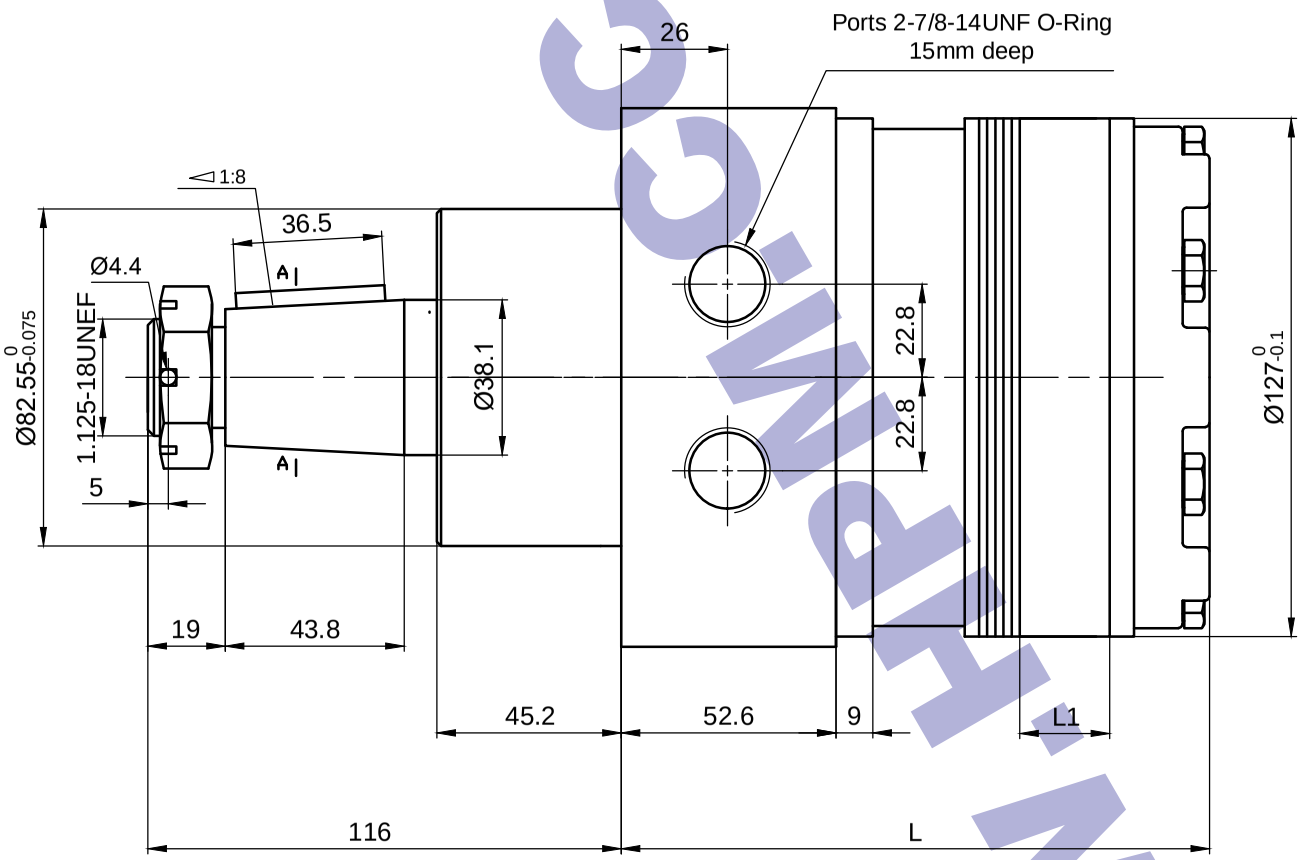

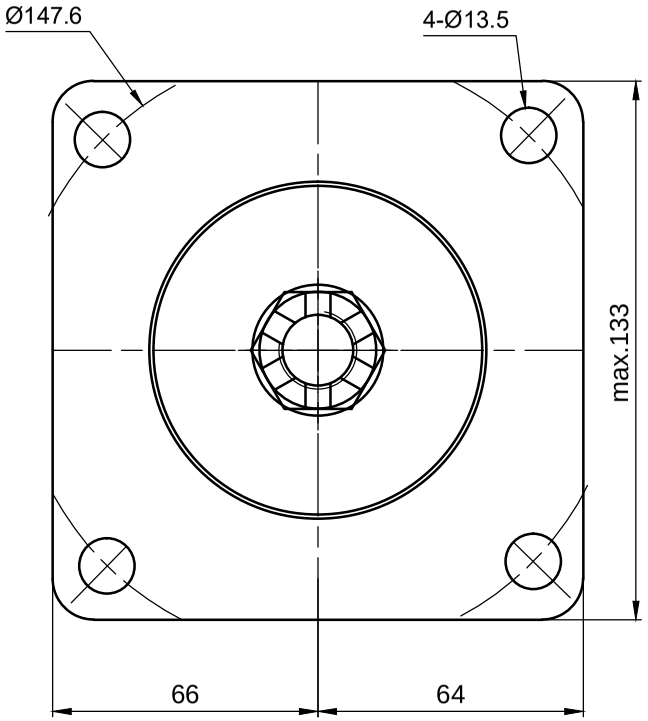

Type	L mm	L1mm
BMER 125	153	10.2
BMER 160	156	13.5
BMER 200	159.5	17
BMER 230	162	19.5
BMER 250	164.5	22
BMER 300	168	25.4
BMER 350	172	29.5
BMER 375	174.5	31.8
BMER 400	178	35.5
BMER 475	182	39.4
BMER 540	190	47.3
BMER 650	199.5	57
BMER 750	206	63.5

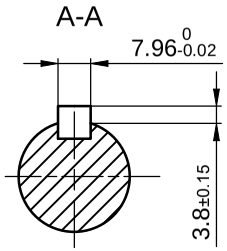

Projection	HPM GROUP	Matr./Spec.
Scale 1:1.3		Contact us : sales@hpm.cc
Confidential: Property of HPM GROUP. Not to be handed over to, copied or used by third party. Two- or three dimensional reproduction of contents to be authorized by HPM GROUP. HPM GROUP can accept no responsibility for possible errors on drawings. HPM GROUP reserves the right to alter products already on order or provided that such alterations can be made without subsequential changes being necessary in specifications already agreed.		Title: BMER Dimensions
		No. BMER-3-*-WS-T31-B

WWW.HPM.CC